RF CHARACTERISTICS

Frequency range : **0 - 3 GHz**
Impedance : **50 Ohms**

Frequency (GHz)	**DC - 3**
VSWR max	**1.10**
Insertion loss max	**0.15 dB**
Isolation min	**80 dB**
Average power (*)	**240 W**

ELECTRICAL CHARACTERISTICS

Actuator : **LATCHING**
Nominal current ** : **80 mA**
Actuator voltage (Vcc) : **28V (24 to 30V) / NEGATIVE COMMON**
Terminals : **solder pins (250°C max. / 30 sec.)**
Indicator rating : **1 W / 30 V / 100 mA**

MECHANICAL CHARACTERISTICS

Connectors : **SMA female per MIL-C 39012**
Life : **10 million cycles**
Switching Time*** : **< 10 ms**
Construction : **Splashproof**
Weight : **< 45 g**

ENVIRONMENTAL CHARACTERISTICS

Operating temperature range : **-40°C to +85°C**
Storage temperature range : **-55°C to +85°C**

(* Average power at 25°C per RF Path)
(** At 25° C ±10%)
(*** Nominal voltage ; 25° C)

PAGE **2/2**	ISSUE **05-06-15**	SERIE : **SPDT**	PART NUMBER : **R570343030**

DRAWING

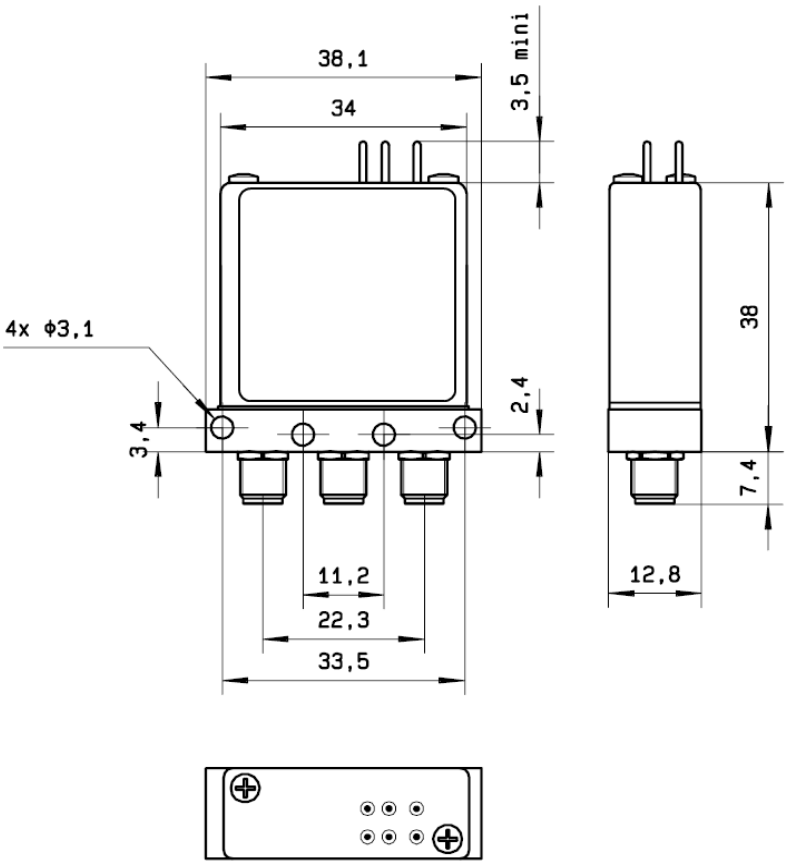

LABEL

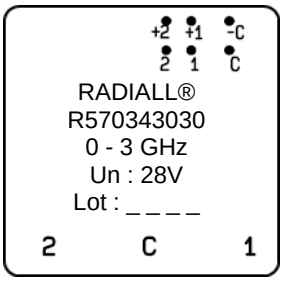

General tolerances : ±0.5 mm

SCHEMATIC DIAGRAM

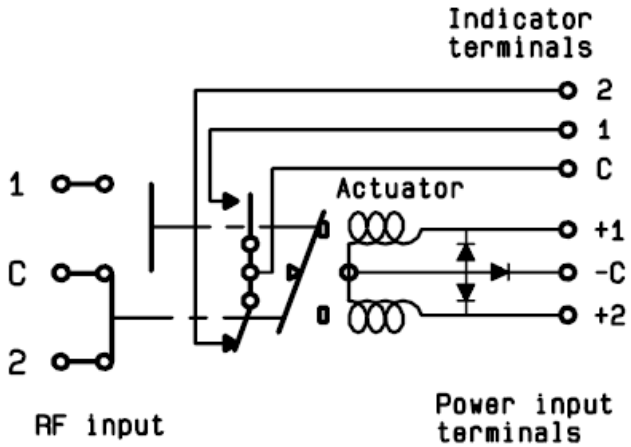

Voltage	RF Continuity	Ind.
-C +1	C ↔ 1	C.1
-C +2	C ↔ 2	C.2