| CONNECTOR DATASHEET | Gwave® |
|---|---|
| QMA(FEMALE) FOR PCB<br>RIGHT ANGLE WITH BULKHEAD | **QMA-KYWHD** |

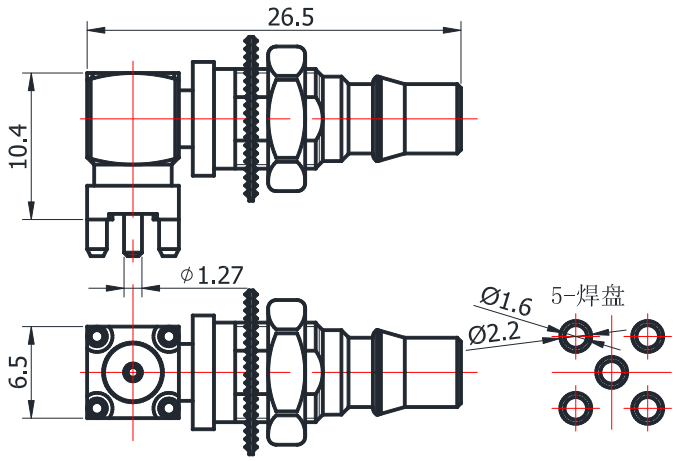


*Dimensions are in mm

## Configuration

| | |
|---|---|
| Connector 1 Type | QMA Female |
| Connector 1 Impedance | 50 Ohms |
| Connector 1 Polarity | Standard |
| Body Style | Right Angle |
| Connector Mount Method | Bulkhead |
| Connector 2 Interface Type | Pin |
| Attachment Method | Solder |

## Electrical Specifications

| | |
|---|---|
| Frequency | DC to 3 GHz |
| Insertion Loss (dB) | ≤ 0.1 xSqt.(f_Ghz) |
| Return loss/VSWR | 1.25 |

## Materials Information

| | |
|---|---|
| Centre Contact | CuBe Gold Plated |
| Outer Contact | Brass White Bronze Plated |
| Body | Brass Gold Plated |
| Dielectric | PTFE |

## Environmental Data

| | |
|---|---|
| Temperature Range | -40°C to +165°C |
| 2002/95/EC(RoHS) | Compliant |

While the information has been carefully compiled to the best of our knowledge, nothing is intended as representation or warranty on our part and no statement herein shall be construed as recommendation to infringe existing patents. In the effort to improve our products, we reserve the right to make changes judged to be necessary.

Gwave Technology Co.,Ltd.
No.33 Building,Hanjiachuan Yard,Haidian District,Beijing
China(100094) www.gwave-tech.com

Tel.: +86 10 62450051/52
Fax: +86 10 62450053
Email: gwave@gwave-tech.com