CONNECTOR DATASHEET	Gwave
2.4MM(FEMALE) FOR PCB	**2.4-KFD0108**

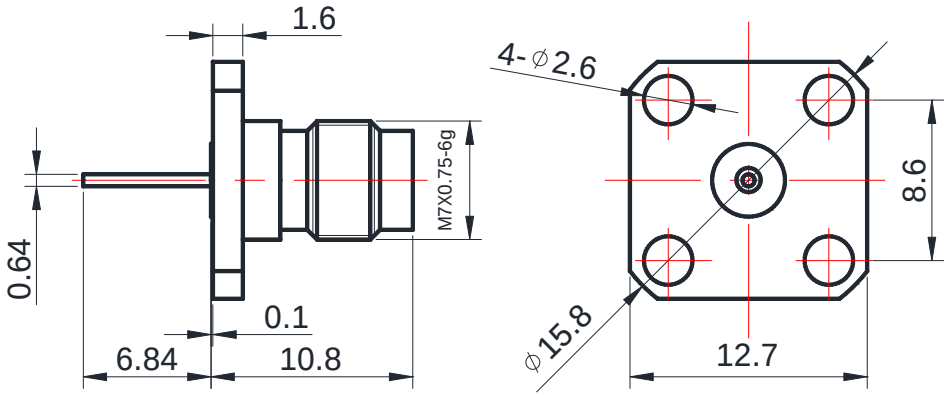

*Dimensions are in mm

Configuration

Connector Type	2.4mm Female
Connector Impedance	50 Ohms
Connector Polarity	Standard
Body Style	Straight
Connector Mount Method	4 Hole Flange
Attachment Method	Contact

Electrical Specifications

Frequency	DC to 50 GHz
Insertion Loss (dB)	≤ 0.05 xSqt.(f_GHz)
Return loss/VSWR	1.15

Materials Information

Centre Contact	CuBe Gold Plated
Outer Contact	Stainless Steel
Body	Stainless Steel
Dielectric	PEI

Environmental Data

Temperature Range	-55°C to +165°C
2002/95/EC(RoHS)	Compliant

While the information has been carefully compiled to the best of our knowledge, nothing is intended as representation or warranty on our part and no statement herein shall be construed as recommendation to infringe existing patents. In the effort to improve our products, we reserve the right to make changes judged to be necessary.

Gwave Technology Co.,Ltd.
No.33 Building,Hanjiachuan Yard,Haidian District,Beijing
China(100094) www.gwave-tech.com

Tel.: +86 10 62450051/52
Fax: +86 10 62450053
Email: gwave@gwave-tech.com