CONNECTOR DATASHEET	Gwave
2.4MM(MALE) FOR PCB	**2.4-JFD0830**

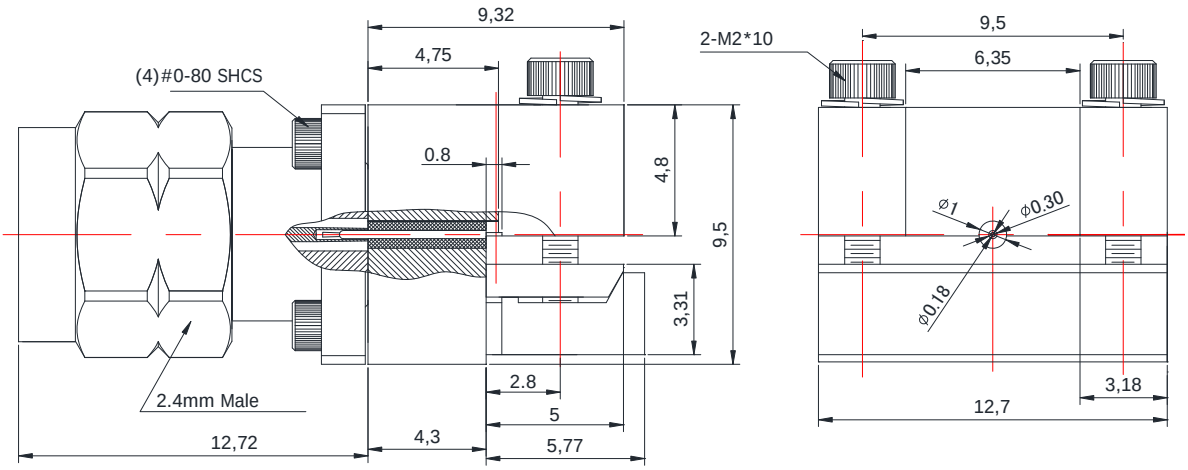

*Dimensions are in mm

Configuration

Connector 1 Type	2.4mm Male
Connector 1 Impedance	50 Ohms
Connector Mount Method	2 Hole Flange
Connector 2 Interface Type	0.18mm Pin
Attachment Method	Contact

Electrical Specifications

Frequency	DC to 50 GHz
Insertion Loss (dB)	≤ 0.05 xSqt.(f_Ghz)
Return loss/VSWR	1.25

Materials Information

Centre Contact	CuBe Gold Plated
Outer Contact	Stainless Steel
Body	Brass Trimetal Plated
Dielectric	PEEK&PTFE

Environmental Data

Temperature Range	-40°C to +165°C
2002/95/EC(RoHS)	Compliant

While the information has been carefully compiled to the best of our knowledge, nothing is intended as representation or warranty on our part and no statement herein shall be construed as recommendation to infringe existing patents. In the effort to improve our products, we reserve the right to make changes judged to be necessary.

Gwave Technology Inc.
4th Floor,New Material Plaza,Yongfeng Hi-Tech Base,Haidian District,Beijing ,China(100094) www.gwave-tech.com

Tel.: +86 10 86484190
Fax: +86 10 86484190-0
email: gwave@gwave-tech.com